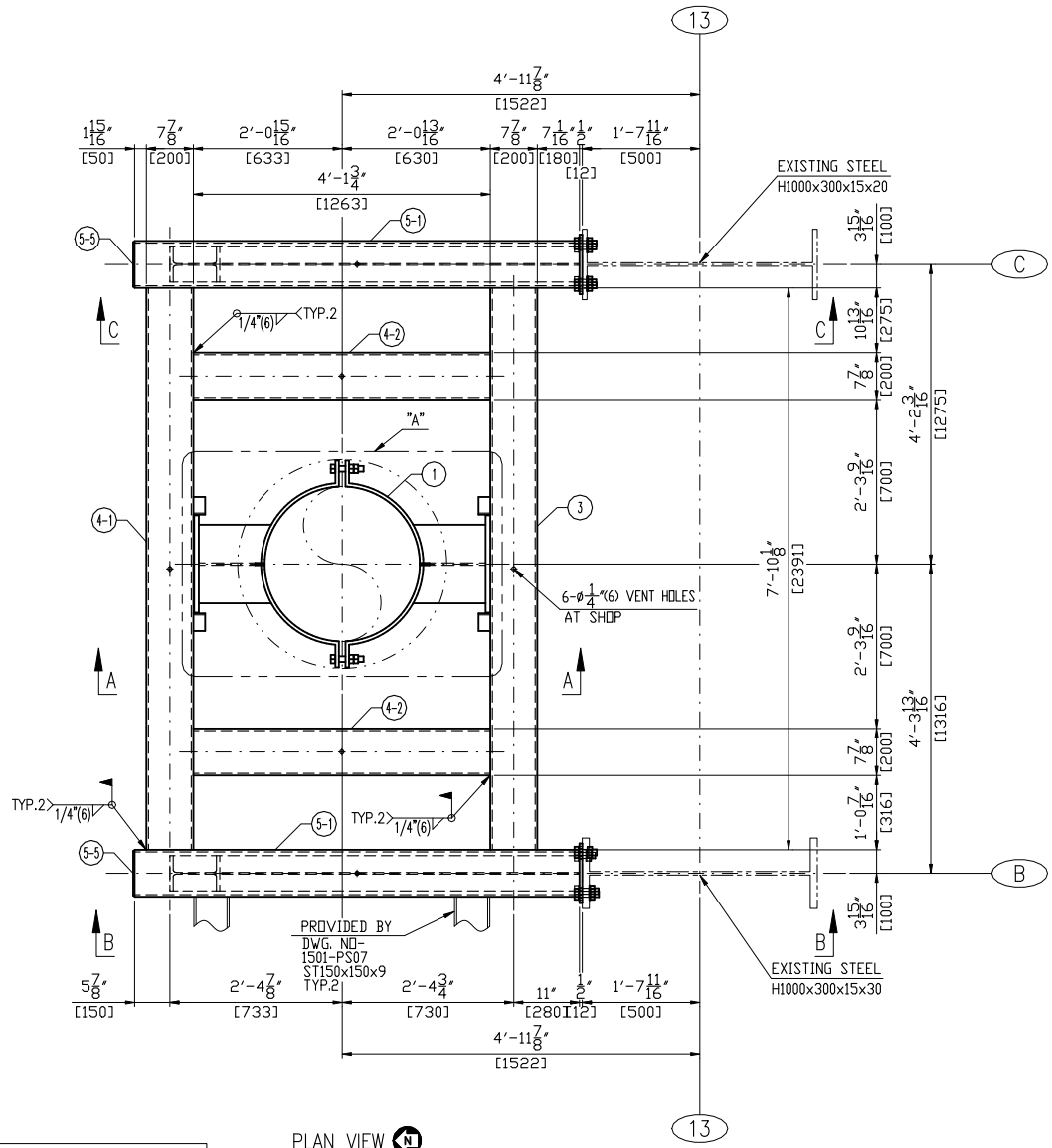

PLAN VIEW

Revision History

Rev	Description	Date	Drawn / Checked By Approved By
–	INITIAL ISSUE	2026-01-21	Drawn J.B.HONG Checked By T.H.KIM Approved By B.L.CHOI

BILL OF MATERIAL — TOTAL WEIGHT : 2169.5 LB — SELECTION NO. 1502 — AREA LEFT

ITEM	DESCRIPTION	TYPE OR SIZE	LENGTH(mm)	LENGTH(IN)	QTY.	MATERIAL	WEIGHT(LB)/UNIT	WEIGHT(LB)/TOTAL	REMARK
1	PIPE CLAMP	PCSDA-650-630			1	A387-22		419.10	NOTE #2
2	CHANNEL	C150x75x6.5x10	50	1.97	4	A36	2.05	8.20	NOTE #3
3	SQUARE TUBE(1-I6)	ST200x200x9	2391	94.13	1	A500 Gr.B		275.69	NOTE #3
4-1	SQUARE TUBE(1-I6)	ST200x200x9	2391	94.13	1	A500 Gr.B		275.69	NOTE #3
4-2	SQUARE TUBE(1-I6)	ST200x200x9	1263	49.72	2	A500 Gr.B	145.63	291.26	NOTE #3
5-1	SQUARE TUBE(1-I6)	ST200x200x9	1893	74.53	1	A500 Gr.B		218.27	NOTE #3
5-2	H-BEAM	H150x150x7x10	2465	97.05	1	A36		171.18	NOTE #3
5-3	PLATE(4-I27-SLOT33-S)	PL12x254x356			1	A36		18.78	NOTE #3
5-4	PLATE(4-I27-SLOT33-S)	PL12x229x457			1	A36		21.73	NOTE #3
5-5	COVER PLATE(4-R14)	PL6x191x191			1	A36		3.79	NOTE #3
6-1	SQUARE TUBE(1-I6)	ST200x200x9	1893	74.53	1	A500 Gr.B		218.27	NOTE #3
6-2	H-BEAM	H150x150x7x10	2465	97.05	1	A36		171.18	NOTE #3
6-3	PLATE(4-I27-SLOT33-S)	PL12x254x356			1	A36		18.78	NOTE #3
6-4	PLATE(4-I27-SLOT33-S)	PL12x229x457			1	A36		21.73	NOTE #3

PIPING INFORMATION — PIPE SIZE (IN): 26 — PIPE MATERIAL: A335-P91

ISO NO.: 1502 — OPER. TEMP (F): 1087 — INSULATION (IN): 4.5

"Z" UP, "Y" NORTH, "X" GAS FLOW EAST

SUPPORT NUMBER	SUPPORT COORDINATES X	Y	Z	DESIGN LOADS (KIPS) X	Y	Z	DESIGN MOVEMENTS (IN) X	Y	Z
1502-PS06	39'-3 13/16'	23'-11 3/8'	55'-0 3/16'	±2.199	±5.039	-1.627	0.12	0.12	-3.08
	11984	7300	16769						

HANGER SETTING DATA(EACH)			
SPRING LOAD	- KIPS	TOTAL TRAVEL	- IN
HOT LOAD	- KIPS	THERMAL MOVEMENT	- IN
COLD LOAD	- KIPS	SPRING RATE	- LB/IN
		VARIABILITY	- %

UNIT NO.: 11

NOTES:

1. PIPE SUPPORT SHOP ATTACHMENTS, GENERAL NOTES, WELD & PLATE DETAILS 1635572-D1S0-3800
2. THIS ITEM WILL BE SUPPLIED BY ENGINEERED PIPE SUPPORT SUPPLIER.
3. THIS ITEM WILL BE SUPPLIED BY STEEL SUPPORT FABRICATOR.
4. PIPE ATTACHMENTS THAT ARE SHOP WELDED ONTO THE PIPE ARE SUPPLIED BY THE PIPE FABRICATOR.
5. BILL OF MATERIAL SHOWN ARE FOR ONE (1) SUPPORT, THERE IS ONE (1) SUPPORT PER UNIT
6. REFER TO DRAWING 1635572-D2S0-3801~3804 FOR TYPICAL SHOP WELDED CONNECTION DETAILS NOT SPECIFIED ON THIS DRAWING.
7. FF* : 1 15/16(50)mm FIELD ADJUST
8. THIS ITEM WILL BE SUPPLIED BY CUSTOMER.

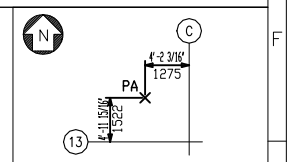

KEY PLAN

ISOMETRIC VIEW

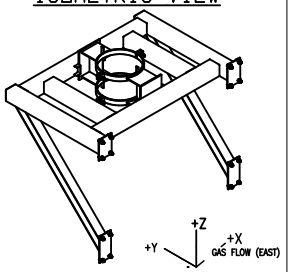

NLR
Copyright© GE Vernova and/or its affiliates 2026
All rights reserved. The information herein is proprietary information of GE Vernova and/or its affiliates. Thus, it is being provided with the explicit expectation of restricted use. All persons or legal entities receiving this information shall be deemed by the act of its receipt to have contractually agreed to make no duplications, reproductions of any nature by any means, modifications, disclosures, or use use any portion of this material; except as is expressly authorized in writing by GE Vernova and/or its affiliates.

THIRD ANGLE PROJECTION

Similar To: NONE	Created By: SEONGHWA		MLI No. NONE
First Made For: 1635572	Checked By: VIMAL.V	Approved By: Kim, Chunrae	IEC61355 No. MTC
GE VERNOVA	Document Type: DETAIL DRAWING		Sheet Size A2
	Document Title: PIPE SUPPORT FOR HRH STEAM OUTLET		
Creation Date 2026-01-21	Drawing No. 1635572-1502-PS06	Revision –	Sheet 1 OF 3

ITEM	DESCRIPTION	TYPE OR SIZE	LENGTH(mm)	LENGTH(IN)	QTY.	MATERIAL	WEIGHT(LB)/UNIT	WEIGHT(LB)/TOTAL	REMARK
5-5	COVER PLATE(4-R14)	PL6x191x191			1	A36		3.79	NOTE #3
6	H.S.B/N/2PW	1"-8 UNC-3 1/2"			8	A325	1.70	13.60	NOTE #3
7	H.S.B/N/2PW	1"-8 UNC-3"			8	A325	1.63	13.04	NOTE #3
8	LUG PLATE	PL10x40x100			4	A387-91	0.69	2.76	NOTE #4

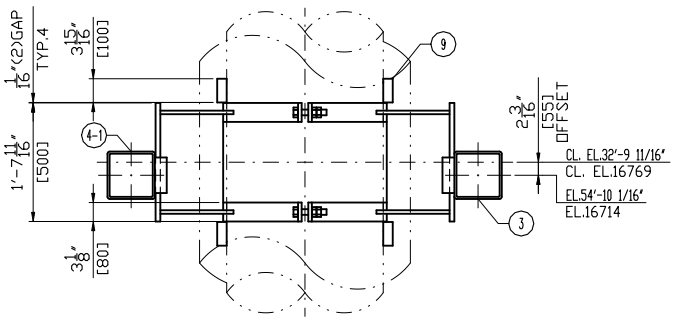

SECTION A-A
LOOKING EAST

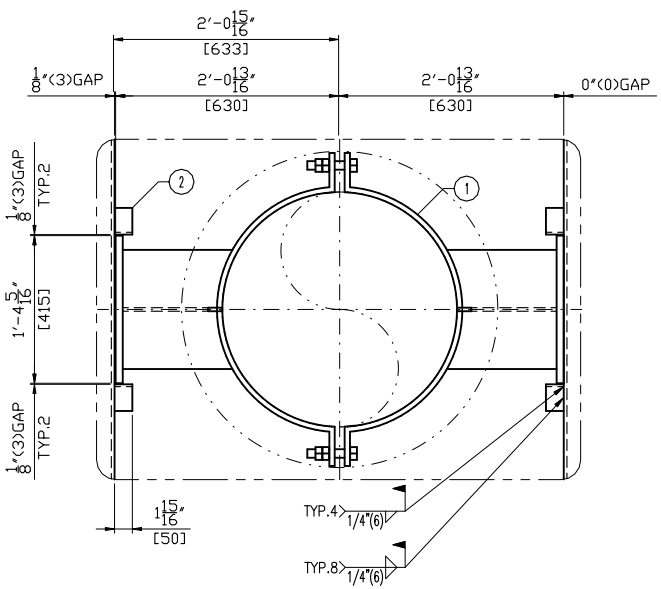

DETAIL "A"

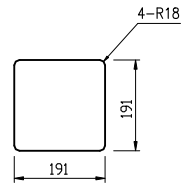

ITEM 5-5 6-5

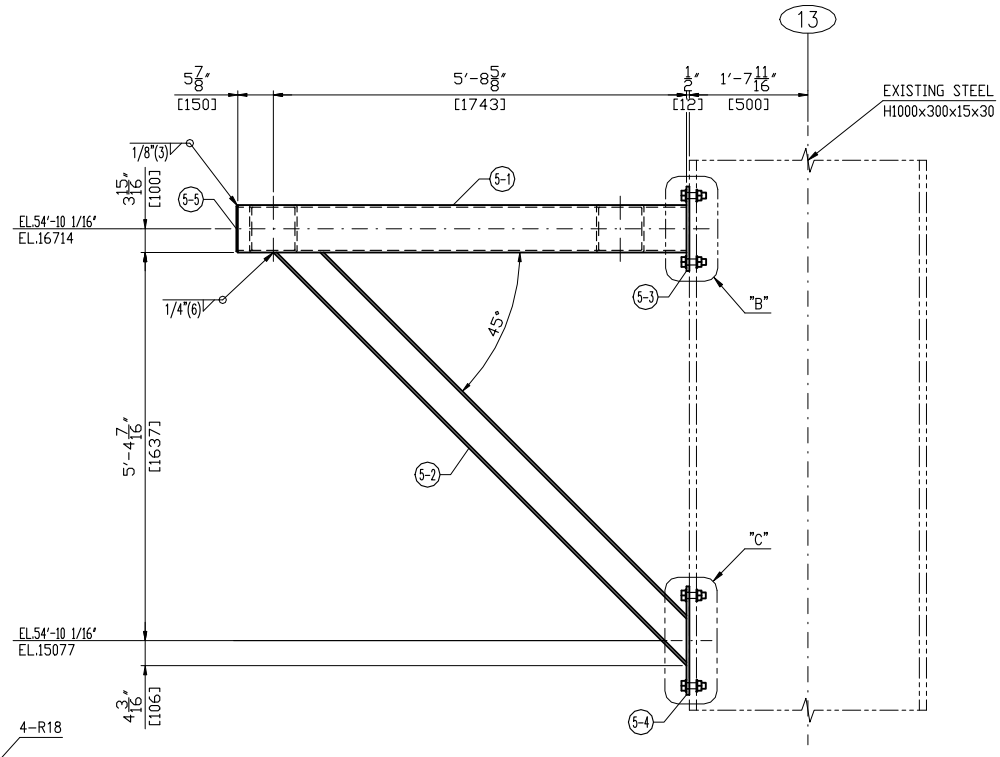

SECTION B-B
LOOKING EAST

NLR

Copyright© GE Vernova and/or its affiliates 2026
All rights reserved. The information herein is proprietary information of GE Vernova and/or its affiliates.

GE VERNOVA

Document Type: DETAIL DRAWING		Sheet Size A2
Document Title: PIPE SUPPORT FOR HRH STEAM OUTLET		
Creation Date 2026-01-21	Drawing No. 1635572-1502-PS06	Revision –	Sheet 2 OF 3

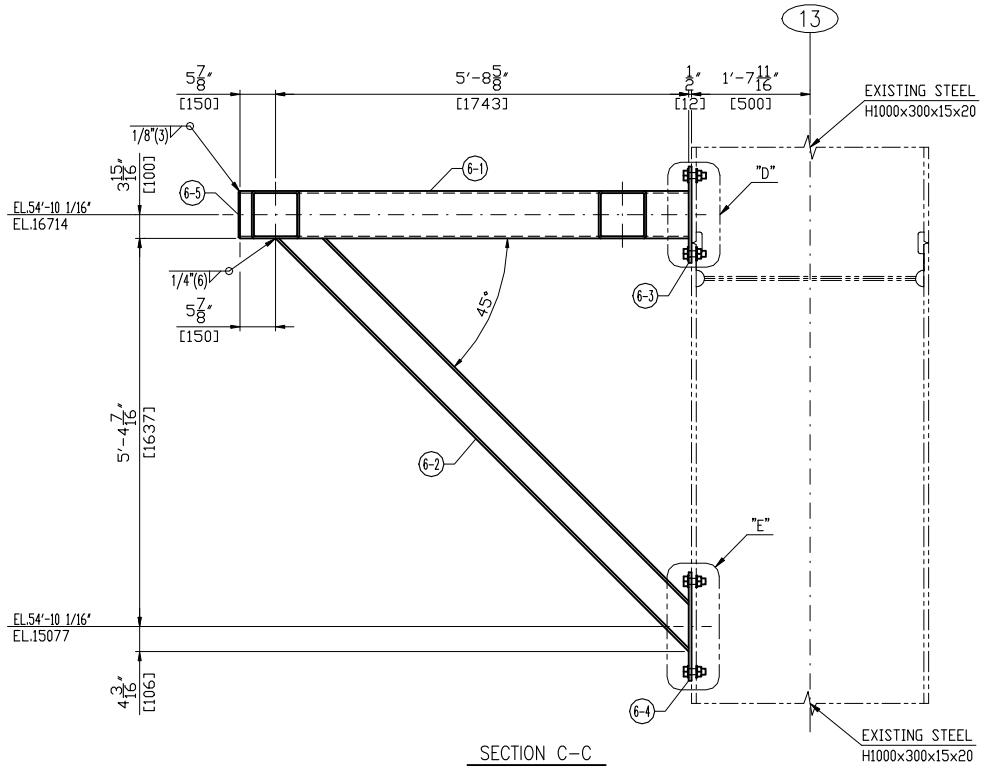

SECTION C-C
LOOKING EAST

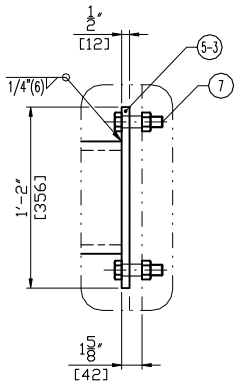

DETAIL "B"

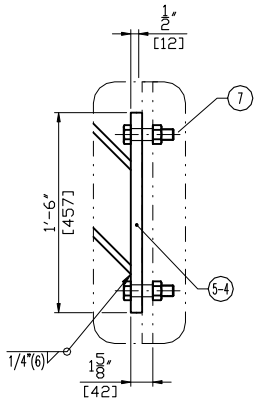

DETAIL "C"

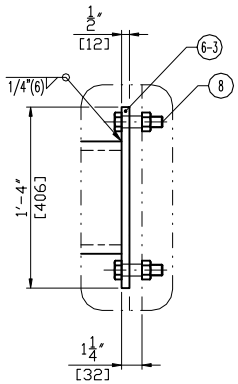

DETAIL "D"

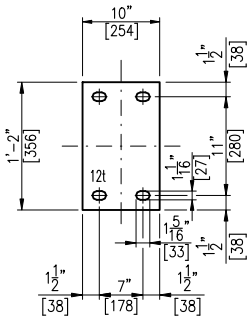

ITEM 5-3

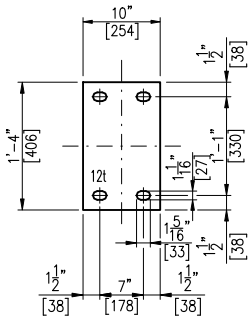

ITEM 6-3

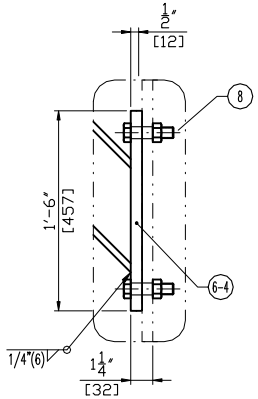

DETAIL "E"

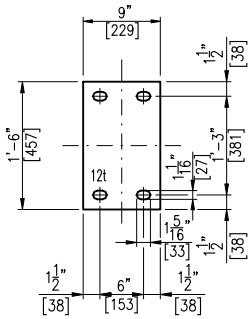

ITEM 5-4 6-4

NLR

Copyright© GE Vernova and/or its affiliates 2026
All rights reserved. The information herein is proprietary information of GE Vernova and/or its affiliates.

GE VERNOVA	Document Type: DETAIL DRAWING		Sheet Size A2
	Document Title: PIPE SUPPORT FOR HRH STEAM OUTLET		
Creation Date 2026-01-21	Drawing No. 1635572-1502-PS06	Revision –	Sheet 3 OF 3